Technical documentation
A50 MOTOR

Requests for quotation to : contact@rov-expert.fr

Description:

The A50 motor is designed for easy integration on any type of ROV, USV, or AUV. Robust and durable, it has been engineered for maximum longevity and easy maintenance. Assembled in France. 2-year warranty. Worldwide exclusive distribution by ROV EXPERT.

Advantages:

✅ **Ball bearing motor** — Increased reliability and durability, with reduced heat generation

✅ **Optimized cleaning** — Front and rear vents for easier cleaning and lubrication

✅ **Rotating cone without support arms** — Ensures more stable laminar flow and reduces turbulence

✅ **Aluminum propellers available as an option** — Enhanced robustness and reduced risk of entanglement with algae or debris

✅ **Repair-friendly design** — Simplified maintenance and easy parts replacement

✅ **2-year warranty** — Covers parts and labor in case of breakage under normal usage conditions

Photos:



A50 Motor

Technical diagram :

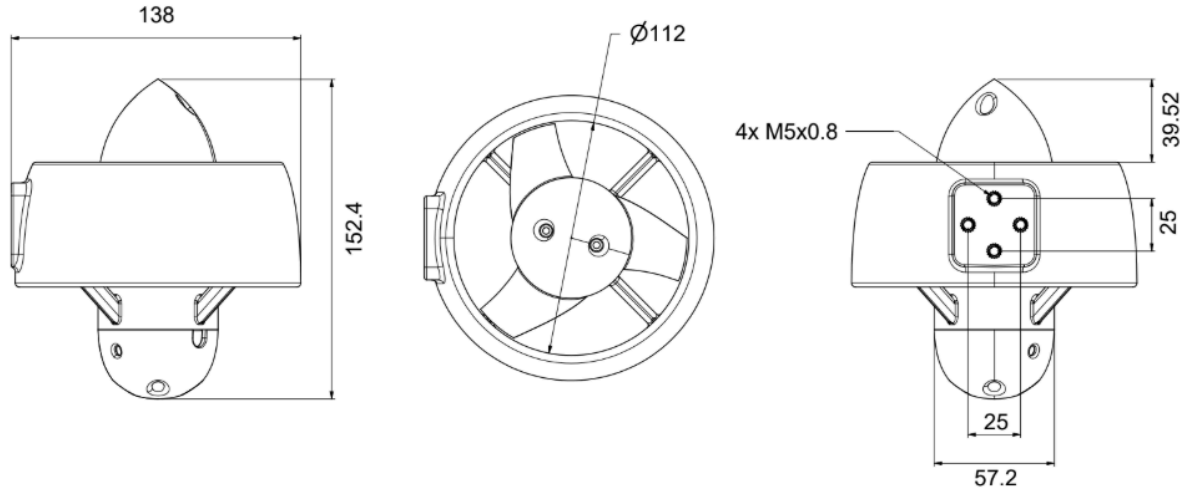

A50 Motor

Specifications:

Cable	1,2 meter – 3*12 AWG
Propeller Material	Anodized aluminum or Polycarbonate with 30% glass fiber, depending on selected option
Body Material	Polycarbonate with 30% glass fiber
Fastener material	Titanium Grade 2 / Stainless Steel 316L
Continuous Power	1000 W – 12 to 36 V
Peak Power	1300 W
Speed	2000 - 8000 RPM
KV Rating	300
Overall Dimensions	Length 152.40 mm – Diameter 138.00 mm
Core Diameter	58.00 mm
Propeller Diameter	108.00 mm
Mounting Hole Spacing	25 mm - 25 mm en M5
Termination options	- None (1.2 m pigtail) - Wetlink - Bluetrail Cobalt 14 3 Pins

Contact:

For any quote request or information about the full Subseatronics range (thrusters, ROVs, accessories), contact ROV Expert at the following address: contact@rov-expert.fr